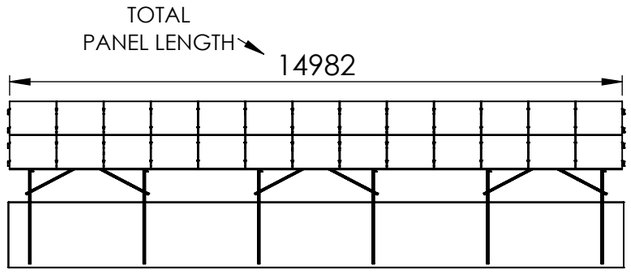

FRONT VIEW

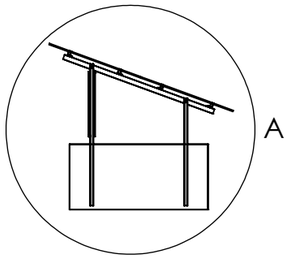

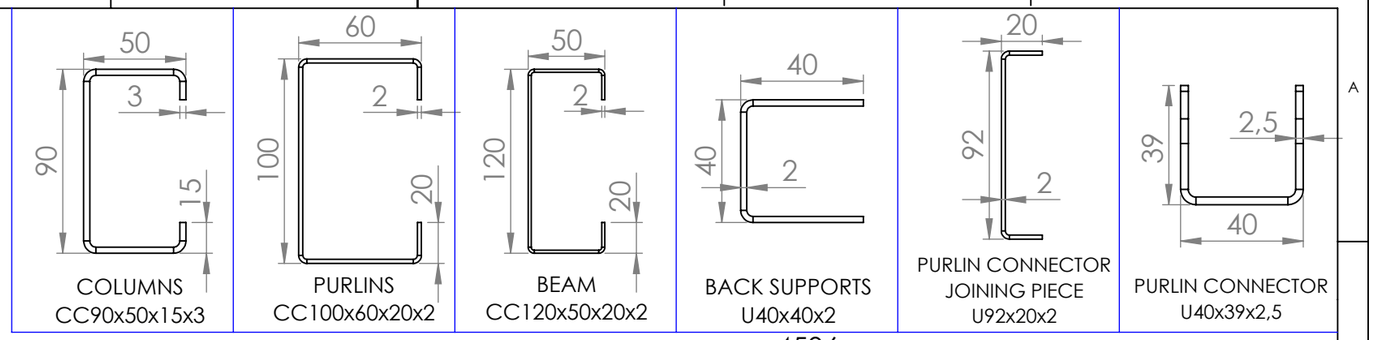

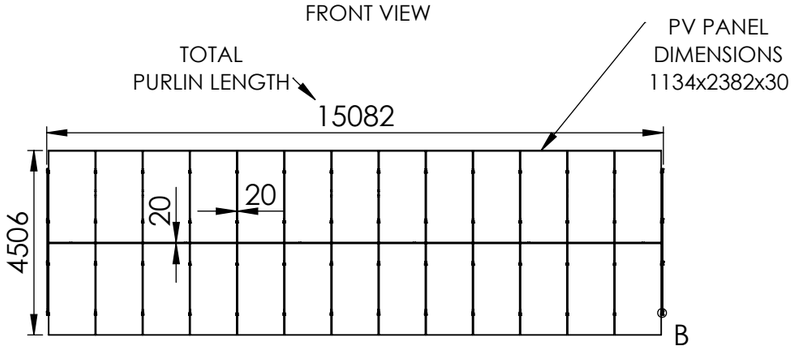

TOP VIEW

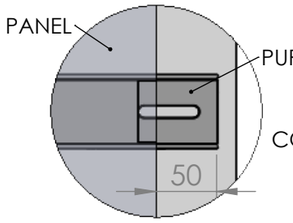

DETAIL B

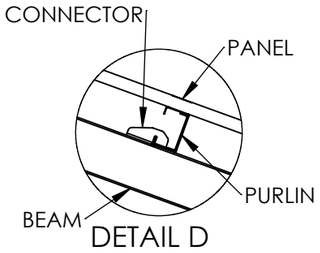

DETAIL D

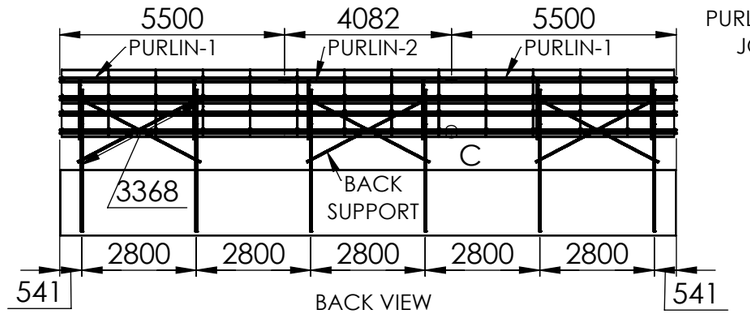

BACK VIEW

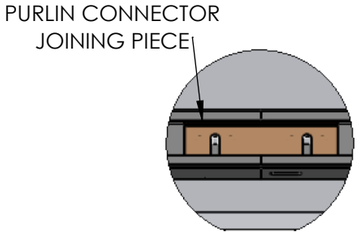

DETAIL C

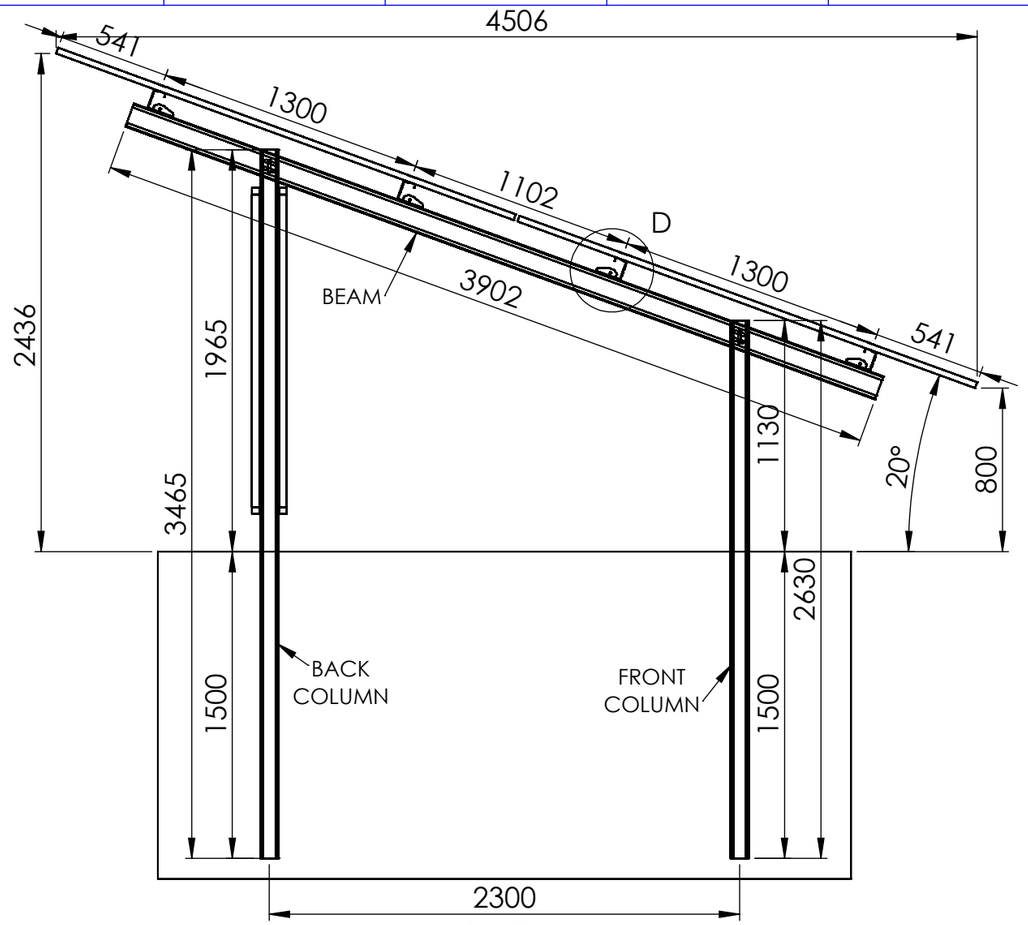

DETAIL A
SCALE 1 : 30

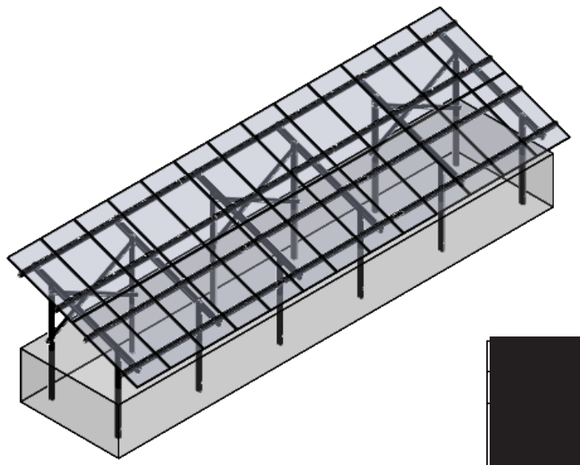

COMPONENT	NAME	MATERIAL	LENGTH (mm)	QUANTITY PER TABLE (pcs.)
FRONT COLUMN	CC90x50x15x3	S355+HDG	2630	6
BACK COLUMN	CC90x50x15x3	S355+HDG	3465	6
BEAM	CC120x50x20x2	S355+HDG	3902	6
PURLIN-1	CC100x60x20x2	S355+HDG	5500	8
PURLIN-2	CC100x60x20x2	S355+HDG	4082	4
BACK SUPPORT	U40x40x2	S355+HDG	3368	6
PURLIN CONNECTOR	U40x39x2,5	S355+HDG	109	24
PURLIN CONNECTOR JOINING PIECE	CC100x2 (U92x20x2)	S355+HDG	250	8
END CLAMP	H30 L60 6063-T6	ALU	-	8
MID CLAMP	L60 6063-T6	ALU	-	48
BOLTS	M8x50 BOLT DIN912	STEEL 8.8	-	56
BOLTS	M8x25 BOLT DIN933	STEEL 8.8	-	48
FLANGED NUT	M8 DIN 6923	STEEL 8.8	-	104
WASHER	M8 LONG WASHER	STEEL 8.8	-	56
WASHER	M8 DIN 9021	STEEL 8.8	-	96
SPRING WASHER	M8 DIN 127	STEEL 8.8	-	104
BOLTS	M12x30 DIN 933	STEEL 8.8	-	68
FLANGED NUT	M12 DIN 6923	STEEL 8.8	-	68
WASHER	M12 DIN 9021	STEEL 8.8	-	136
SPRING WASHER	M12 DIN 127	STEEL 8.8	-	68

[redacted]

A4

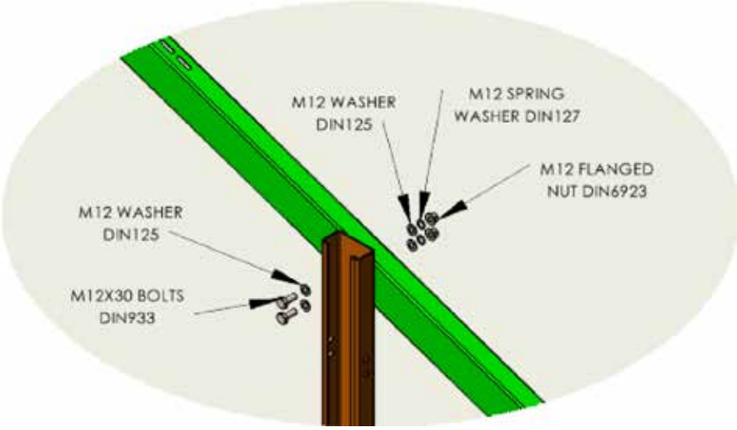

BEAM - COLUMN ASSEMBLY

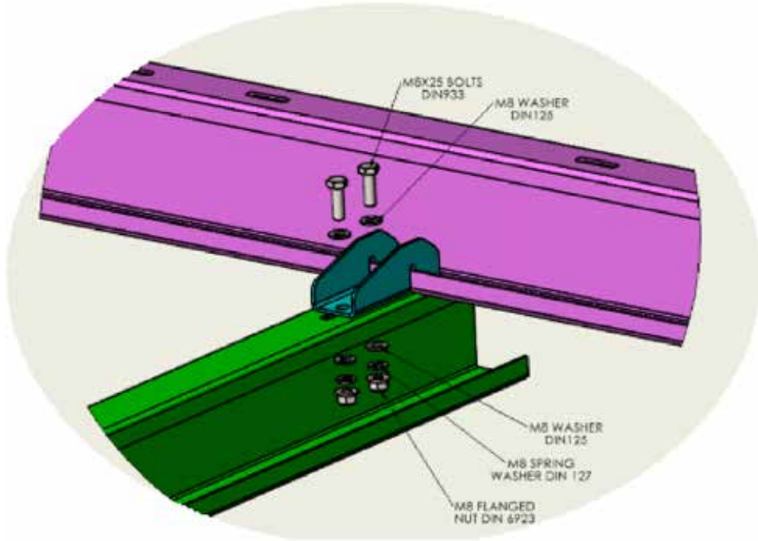

PURLIN - BEAM ASSEMBLY

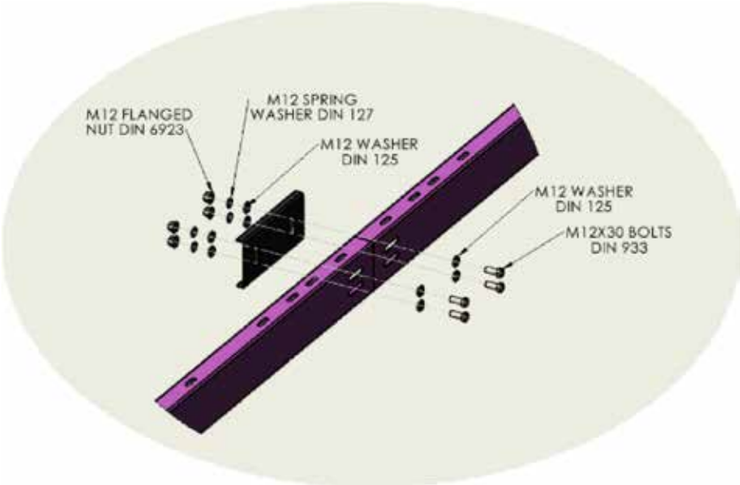

PURLIN CONNECTOR JOINING PIECE ASSEMBLY

END CLAMP AND MID CLAMP ASSEMBLY

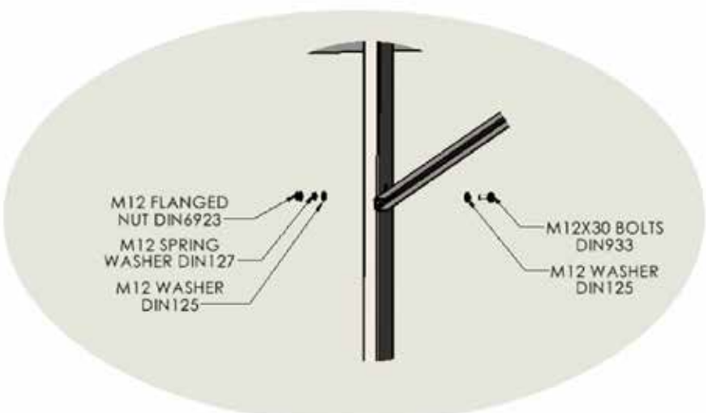

SUPPORT ASSEMBLY

[redacted]

A4